Manufacturing Technology: The Stone-Painted Lamp

Introduction

Manufacturing is the processing of raw materials into useful products primarily with the use of machines. Manufacturing companies must have the following assets before engaging in production: **capital, raw materials, human resources,** and **knowledge**. The ability of the company to manage these assets determines the amount of profit that can be made.

In 1913, Henry Ford was able to maximize profits by producing more cars than all other manufacturers combined. He accomplished this by inventing and using the moving assembly line. The assembly line is only possible with the use of **interchangeable parts**. Today manufacturing companies often use complex assembly lines to mass produce their products. These assembly lines frequently employ a robotics system to pick and place parts, weld, or paint. The **JIT** (just-in-time) concept makes parts and materials available precisely when and where needed on the assembly line. Modern **CIM** (computer-integrated manufacturing) production lines have all the computers in the plant linked together. Both JIT and CIM are used to reduce overhead and increase quality and profits. When a single unit is needed, the **custom production** method is used. Custom-produced items often are considered works of art and are usually very expensive.

In this successful, high-interest activity you will use a modified production line to produce the stone lamp. In this system, each person or group will be responsible for completing one specific job. The success of the **production run** is dependent on everyone doing his/her job properly.

Materials

light socket
suitable 3/4" lumber
lamp wire
2 flat washers
1 lock washer
2 nuts
lamp harp
4 chair buttons
plug
wood filler
wood primer
lamp finial
100 grit sandpaper
threaded pipe (1/8" I.P.S.) 3/8" O.D. running
Krylon Stone Craft Paint

Tools and Equipment

radial arm saw
table saw with dado cutter
router (router table)
drill press
hacksaw
hand screw or C-clamps
finishing sander
hand drill
screwdriver
wire cutters/strippers
low-temperature hot-glue gun

Procedures

The lamp body consists of three major components: the base, the center, and the top. The center is made of two identical pieces glued together. The three pieces are held together using wood glue and a length of 3/8" threaded pipe. The body is primed and painted prior to the electrical connections being made.

Procedures (continued)

Components to be cut (all in inches):

1 - **base** 3/4 X 5 1/2 X 8 5/8
2 - **center** 3/4 X 2 X 12 1/2
1 - **top** 3/4 X 1 1/2 X 2
1 - **threaded pipe** 14 1/4

Base

1. Cut the base to length using a radial arm saw. A stop should be set up to ensure that all bases are cut the same size.

2. Draw an "X" on the bottom of the base from corner to corner. This finds the center of the base. (See figure 2.)

3. From the bottom, drill a 7/8"-diameter hole in the center of the base (3/8" deep). The dril-press depth adjustment should be set so the holes do not go all the way through. A spade (speedbore) bit should be used for this operation. (See figure 1.)

4. From the bottom, drill a 3/8" diameter hole through the center. This hole is in the center of the first hole. This will allow space for the threaded pipe, the washer, and the nut assembly. (See figure 1.)

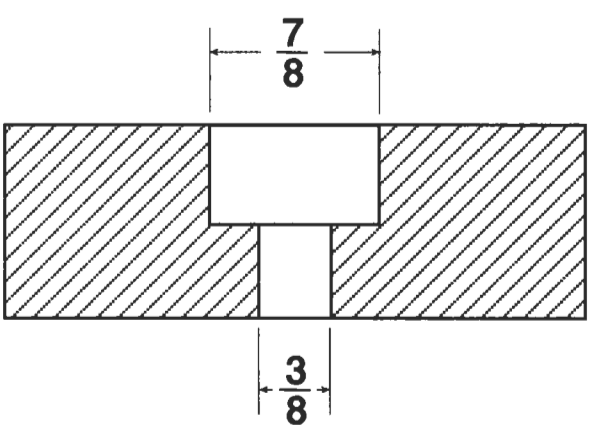

Figure 1

5. On the "X" (see #2 above), measure and mark 1" from each corner. Remember, this is on the bottom of the base. (See Figure 2.)

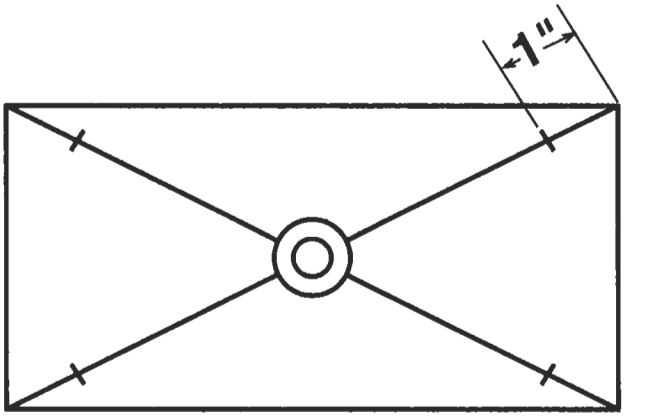

Figure 2

6. Using the drill press, make a 1/2" hole halfway (3/8" deep) through at each mark. The drill press depth adjustment should be set so the holes do not go all the way through. These holes will be used for the feet.

7. Using a router, machine only the edges on the **top** of the base. A router table should be used for this operation.

8. Fill any imperfections with wood filler and let them dry completely.

9. Using a finishing sander, lightly sand the top and the edges of the base.

Center

1. Cut the two center pieces to length using the radial arm saw. A stop should be established to ensure that all pieces are identical in length.

2. Rip both pieces to width using the table saw.

3. Using a dado blade on the table saw, cut a groove 5/8" wide and 3/8" deep on the inside of each piece. (See figure 3.)

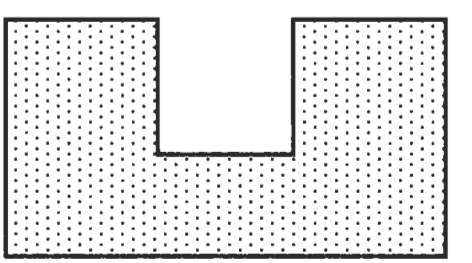

Figure 3

4. Spread a thin layer of glue on the mating surfaces of one piece. Clamp the section using C-clamps, making certain the sections are lined up. You need only slight pressure. Wipe off any excess glue. Let the glue dry overnight before removing the clamps. (See figure 4.)

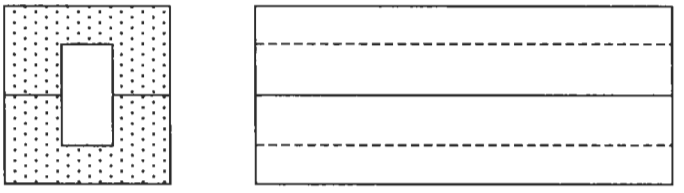

Figure 4

5. Fill any imperfections with wood filler and allow to dry. Sand the seam and any wood filler smooth using a finishing sander.

Top

1. Rip top to width using a table saw.

2. Cut top to length using a radial arm saw.

3. Locate the center using a straight edge. Draw an "X" from corner to corner on the top.

4. Drill a 3/8" hole through the center of the top.

Assembly of the Lamp Body

1. Place the base upside down on a bench. Apply a small amount of glue into the four holes for the feet. Using a mallet, tap the chair buttons into place and remove any excess glue.

2. Cut the threaded pipe to length using a hacksaw. However, thread a nut onto the pipe before cutting. This will allow the threads to be "cleaned up" after the pipe is cut. Remove any burrs that could damage the electrical wire.

3. Place a small amount of wood glue on the top and bottom of the center section. With a washer and nut on one end of the pipe, slide the bottom over the pipe. Slide the center section on next. Finally place the top in position.

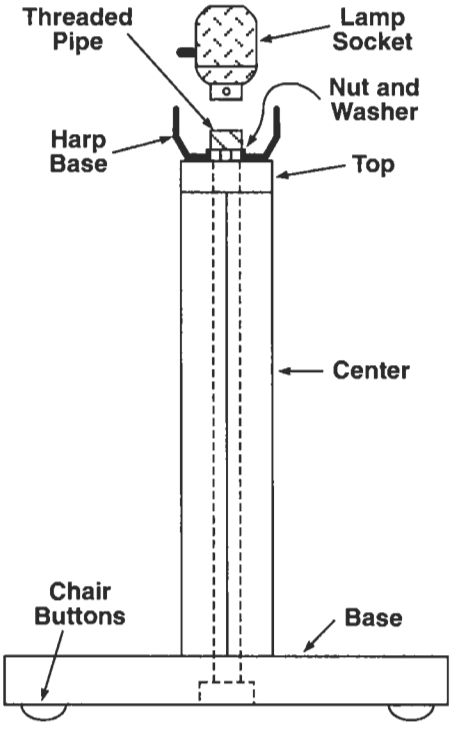

Figure 5

4. Place a washer on the top end of the pipe and hand tighten the nut. Align the three components and finish tightening the nut using a wrench. Do not overtighten. Remove any excess glue. Allow the glue to dry completely. (See Figure 5.)

5. Sand the joint between the top and the center smooth. This must be done so the seam will not show when the lamp is painted.

6. Remove all sanding dust, then prime. Allow primer to dry completely and lightly sand using 220 grit sandpaper.

7. Following label directions, paint the lamp using Krylon's Stone Craft Paint. Allow to dry.

8. Remove the top nut. Place the base of the harp in position and thread a new nut onto the pipe. Tighten the nut using a wrench.

9. Loosen the set screw on the base of the lamp socket. Thread the base of the lamp socket onto the pipe and tighten the set screw.

Assembly of the Electrical Components

(Follow specific directions supplied with the lamp socket.)

1. Cut the 18-gauge lamp cord to the desired length using wire cutters.

2. Separate the two wires on one end. Tie an **underwriters knot** in the split end. *Have your instructor check your work before proceeding.*

3. Using wire strippers, strip the correct amount of insulation from each wire segment (the directions for your specific lamp socket should have this information).

4. Twist the wire strands clockwise. Maintaining polarity, neatly wrap the wire around the mounting screw clockwise. Tighten the screws. *Have your instructor check your work before proceeding.*

5. Carefully run the wire through the threaded pipe without damaging any of the insulation. The attached socket should rest in the socket base. The underwriters knot should stop the wire from going through the pipe.

6. *Have your instructor check your work and install the lamp-socket insulation and cover for you.*

7. Maintaining polarity, connect the plug following directions supplied with the plug. *Have your instructor check your work before proceeding.*

8. Insert a bulb and test the lamp operation.

9. With the lamp upside down, and while holding the wire in the center of pipe, use the low-temperature hot-glue to hold the wire in the center of the pipe.

10. Install the harp and the finial.

Safety

Your instructor will cover three areas of safety instruction:

1. General safety will cover areas such as laboratory behavior and how you should conduct yourself while there. You will be expected to know and will be tested on general laboratory safety. An example of a general safety rule is as follows: Horseplay will not be permitted at any time in the technology lab.

2. Specific safety rules for the hand tools, power tools, and power machinery necessary to fabricate the product in this activity will be covered by your instructor. You must obtain permission before using any machine. You must wear safety glasses while operating any machine. Additionally, your instructor will provide you with specific safety instructions and rules for working with any chemicals that are needed during this project. You will be required to pass a safety test on your knowledge of these rules and procedures.

3. Have all electrical work checked by your instructor before plugging in the lamp.

Ecology

Follow all label directions for the use and disposal of paints and solvents. Always work in a well-ventilated area when using paints and solvents. Recycle materials whenever possible.

Vocabulary

production run	knowledge
interchangeable parts	CIM
human resources	raw materials
JIT	underwriters knot
custom production	capital

TEACHER GUIDE
MANUFACTURING: STONE-PAINTED LAMP

Objectives: Upon completion of this packet, the student will be able to:

1.Demonstrate knowledge of the routing process.

2.Demonstrate knowledge of the gluing process.

3.Demonstrate knowledge of hand-tool operations.

4.Demonstrate knowledge of power-tool operations.

5.Demonstrate knowledge of the sanding process.

6.Demonstrate knowledge of a specialized finishing process.

7.Complete the manufacturing process of a product.

Helpful Hints:

1. The wood used may be of a fairly inexpensive variety because the stone paint will completely cover it.

2. The joints must be sanded smoothly so the seams will not show.

3. During the drilling operation, make sure the depth stop is set.

4. Suitable lamp shades may be obtained from a local discount department store.

Additional Assignments:

1. Have students complete a research paper on the topic of the assembly line, Henry Ford, or mass production. Research can be done at the library and/or online.

2. Have the students visit a lighting supply store and talk to a salesperson concerning the vast array of lighting choices. As a follow-up, students can make short oral presentations to the class.

LANGUAGE ARTS APPLICATION
MANUFACTURING: STONE-PAINTED LAMP

_____
Student Name

Write a letter to a friend explaining what you do in your technology education class. You may want to include in your letter a description of the projects available to you and what you like and dislike about the class. Be as detailed and specific as you can.

MATH APPLICATION
MANUFACTURING: STONE-PAINTED LAMP

_____
Student Name

1. Lamp sockets are $1.85 each. For the production run, you need 35 lamp sockets. You have $46 to spend on lamp sockets. Is this enough to purchase the sockets?

   Yes _____ What is the excess dollar amount? _____
   No _____ What is the dollar amount lacking? _____

2. Four lamps may be spray-painted from one can of paint. The stone spray paint is $9.35 a can. Thirty-five lamps need to be painted. How many cans of paint must be purchased to fully paint all the lamps?

   _____

3. A production team of 5 can make 10 lamps per hour and their average pay is $7. per hour. What is the labor cost per lamp?

   _____

4. If the lamp costs $5.55 to make and is sold for $15.99, what is the dollar amount of the profit?

   _____

5. If the cost (from question 4) increases 10 percent and the lamp is still sold for $15.99, what is the dollar amount of the profit?

   _____

6. If the instructions call for a hole to be drilled that is between 3/8" and 9/16", which drill bit size would be acceptable to use? (Circle the correct answer.)

   3/16" 1/2" 7/8"

7. If the instructions call for a hole to be drilled that is .375" in diameter and your drills are marked in fractions, which drill bit should you select?

   _____

8. Washington's factory can make 225 lamps a day. An order is placed for 850 lamps. How many days are required to produce the lamps?

   _____

9. Jim needs to buy lamps for resale at his department store. A single lamp costs $15.99. However, Jim will get a 20 percent discount for lamps that are ordered in lots of 100 or more and a 25% discount for lots of 500 or more. If Jim ordered 400 lamps, what would he pay for each one?

   _____

10. The height of the lamp is 18". Tina believes the lamp will look better if the height is decreased by 1/6. How tall does Tina want the lamp to be?

    _____

VOCABULARY QUIZ
MANUFACTURING: STONE-PAINTED LAMP

_____
Student Name

production run	knowledge
interchangeable parts	CIM
human resources	raw materials
JIT	underwriters knot
custom production	capital

1. _____ A manufacturing supply system that provides for the components to arrive precisely when needed.

2. _____ Computer integrated manufacturing.

3. _____ A special way of tying an electrical cord before the cord attaches to the lamp socket.

4. _____ A company's money, buildings, and supplies.

5. _____ A method used to produce a single example of a product.

6. _____ The employees of a company.

7. _____ Parts that are produced exactly the same.

8. _____ The time between the start-up and shutdown of a production line that manufactures a specific product.

9. _____ The unprocessed items needed to manufacture a product.

10. _____ An understanding of specific information.